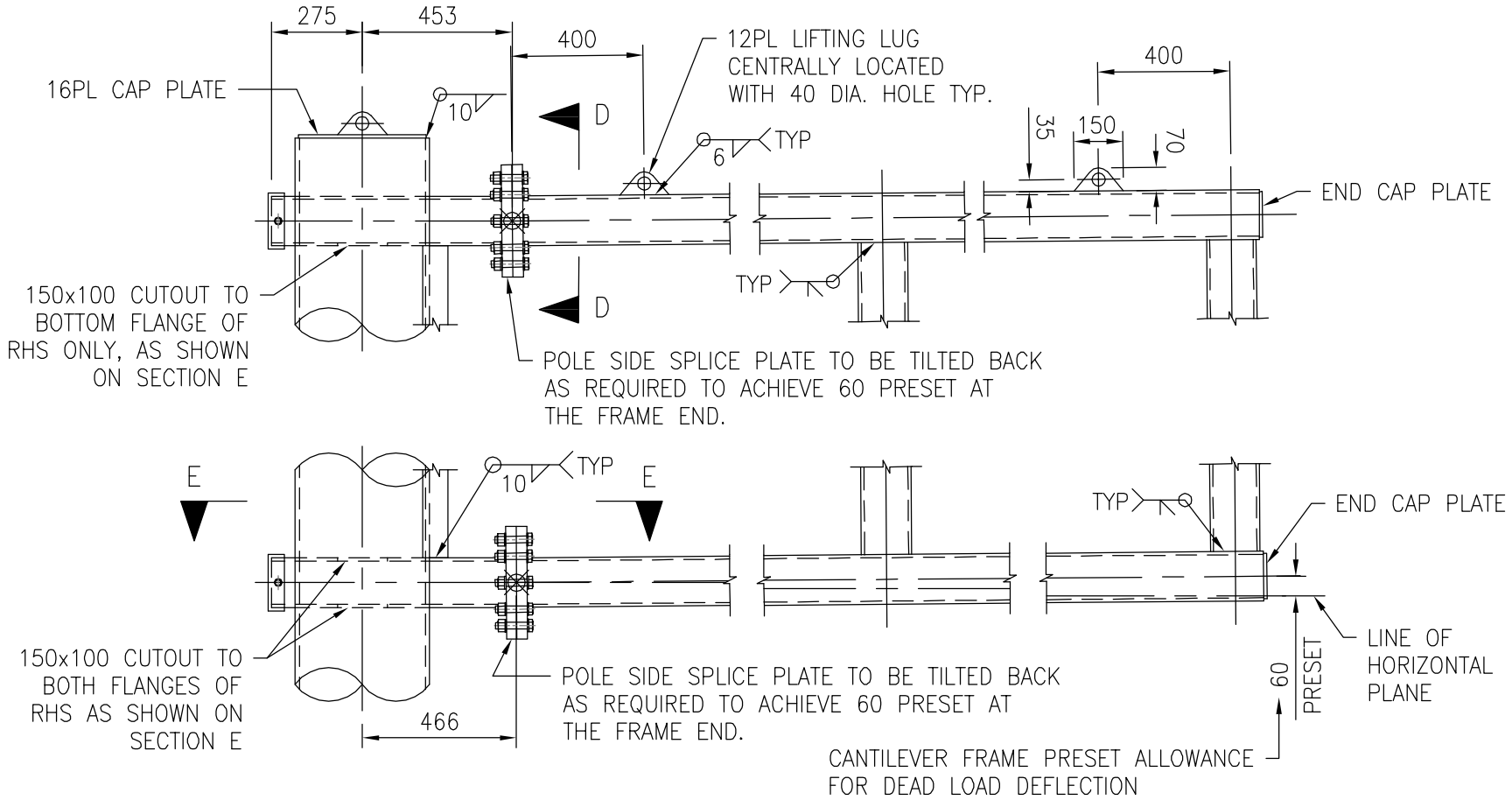


## VMS CANTILEVER FRAME DETAIL

SCALE 1:20

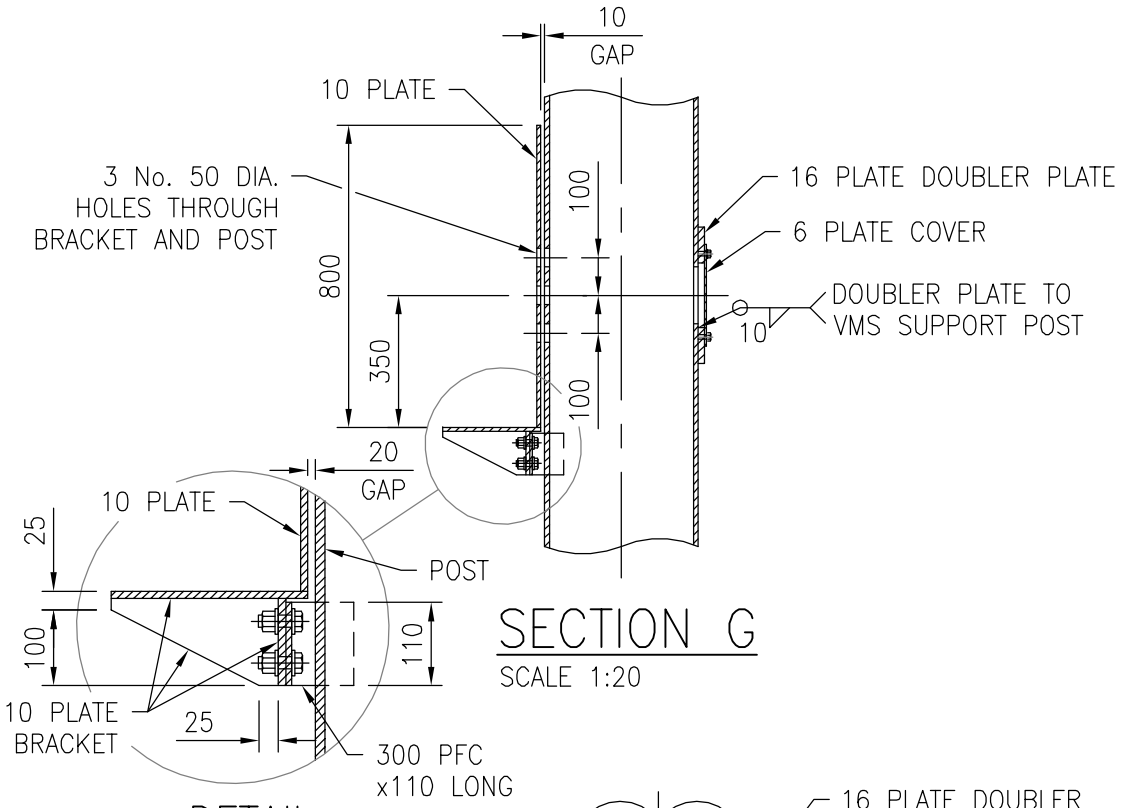


## SECTION G

SCALE 1:20

## DETAIL

SCALE 1:10

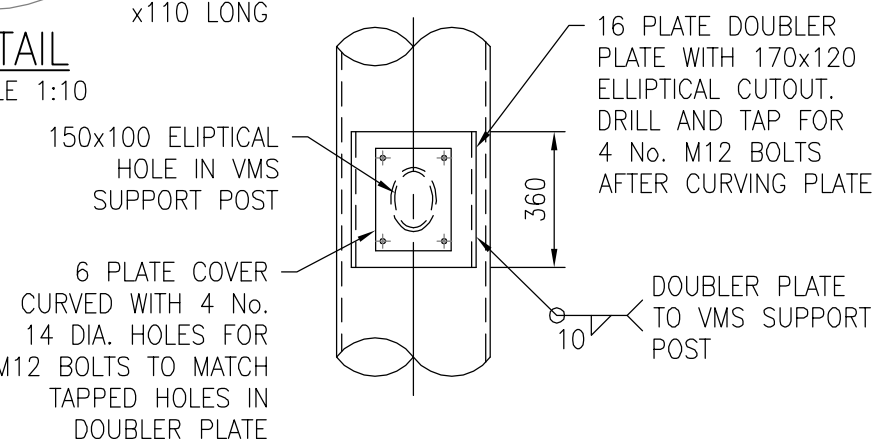


## SECTION H

SCALE 1:20

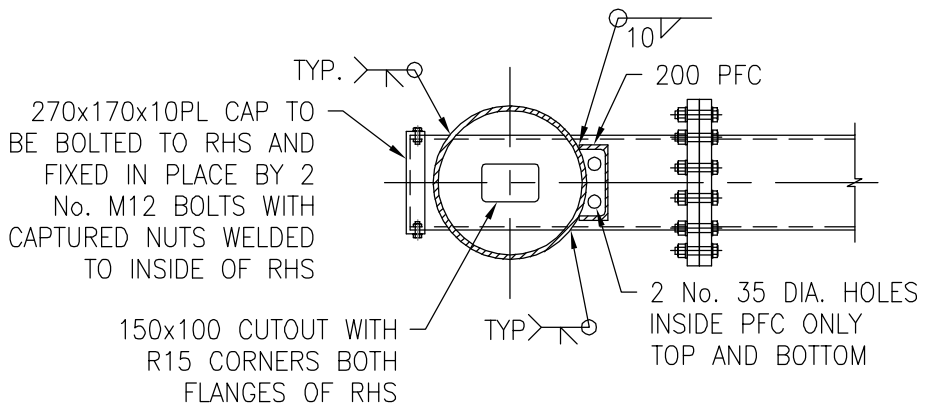


## SECTION E

SCALE 1:20

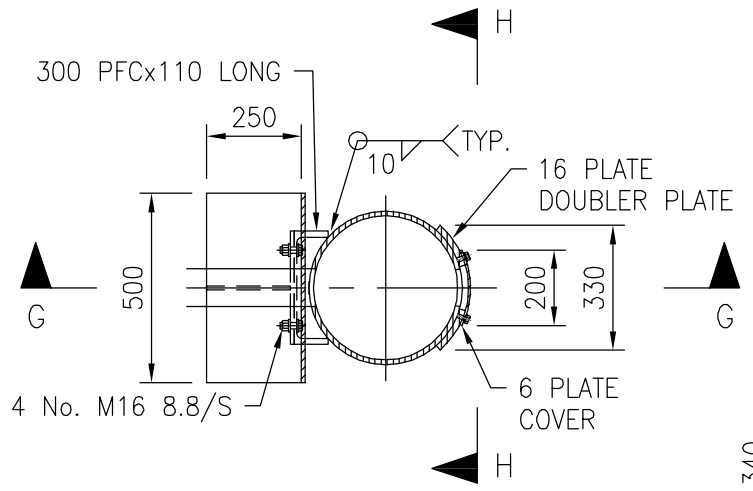


## SECTION F

REFER SHEET 3

SCALE 1:20

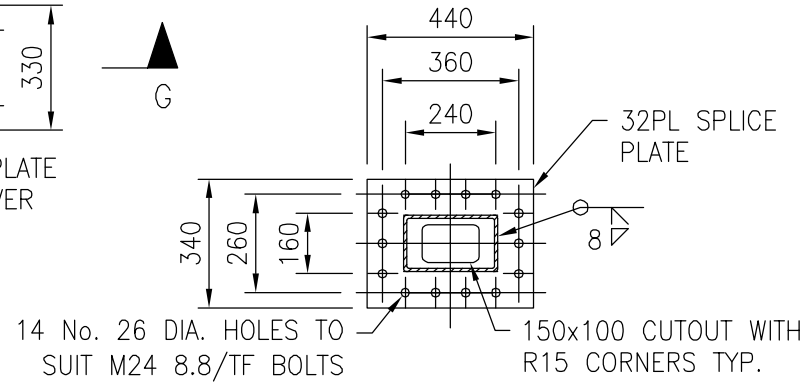


## SECTION D

SCALE 1:20

## STRUCTURAL DESIGN CERTIFICATION

| DESIGN | DESIGN CHECK | AUTHORISED FOR ISSUE |
|---|---|---|
| Dilan Rowel, RPEQ:08455 2013.10.22 13:27:30 +10'00' | Lenita Mendis, RPEQ:8950 2013.10.22 15:34:11 +10'00' | Bala Balakumar, RPEQ:3963 2013.10.22 15:58:49 +10'00' |

| ISSUE | AMENDMENT | DRAWN DATE | CHK'D DATE | APPR'D DATE |
|---|---|---|---|---|
| A | ORIGINAL ISSUE | Oct '13 | Oct '13 | Oct '13 |

DRAWING AUTHORISED FOR PUBLICATION
Inga Condric 2014.04.15 07:37:05 +10'00'
for ASSET ENGINEERING MANAGER
STRATEGIC ASSET MANAGEMENT
DESIGN APPROVED
*Eric Bradley Signature on Original*
*Dec 2013*
Intelligent Transport Systems Manager

| | | | |
|---|---|---|---|
| DESIGN | D.R. | DATE | Oct '13 |
| DRAWN | D.M. | DATE | Oct '13 |
| CHECKED | L.M. | DATE | Oct '13 |
| DRAWING FILENAME | \BSD-4311-SHEET 4 (A).dwg | | |
| ASSOCIATED PLANS | BSD-4311 SHEETS 1, 2, 3 & 5 | | |

BRISBANE CITY

**BRISBANE CITY COUNCIL STANDARD DRAWING**

VMS SUPPORT STRUCTURE
TYPE BCC–VC SHEET 4 OF 5
FRAME DETAILS

SCALE: AS SHOWN
DWG No.: BSD–4311
ORIGINAL SIZE: A3
REVISION: A