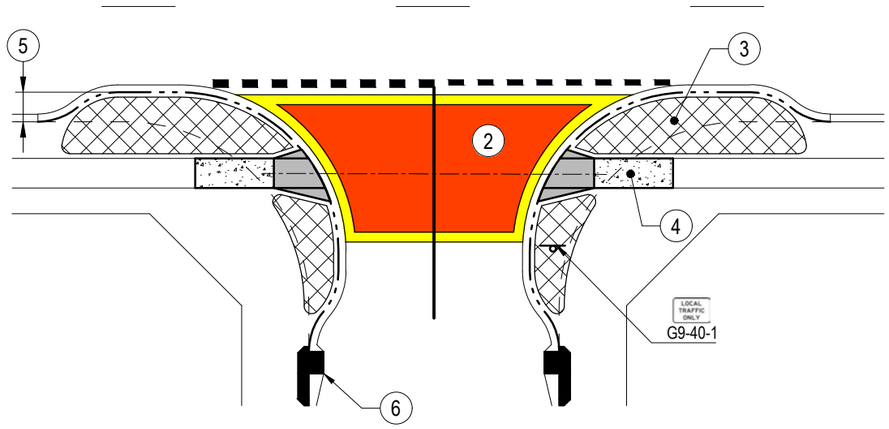

KERB BUILDOUTS ONLY

N.T.S

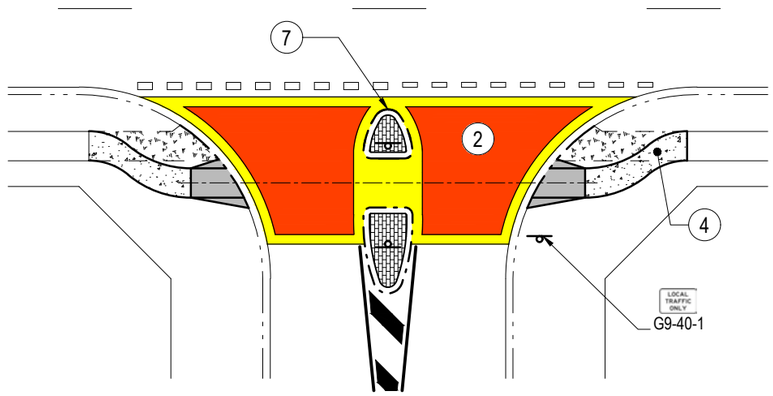

ISLANDS ONLY

N.T.S

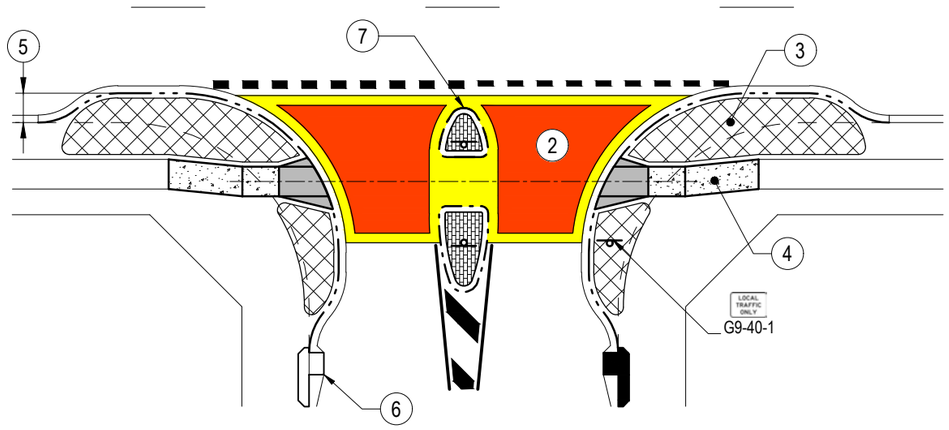

KERB BUILDOUTS AND ISLANDS

N.T.S

NOTES:

1. EXTENT OF KERB BUILDOUTS AND LOCATION OF ISLANDS SHALL BE DETERMINED BY TURNING REQUIREMENTS OF LARGEST DESIGN VEHICLE.
2. COLOURED PAVEMENT TREATMENT AS PER BSD-3166.
3. LANDSCAPING TO BUILDOUTS AS SPECIFIED. LANDSCAPING TO BE IN ACCORDANCE WITH THE QUEENSLAND MANUAL OF UNIFORM TRAFFIC CONTROL DEVICES (MUTCD), FIGURE 2.2 - '*SIGHT DISTANCE GUIDELINES FOR USE OF STOP SIGNS*', AND SHALL NOT UNREASONABLY OBSTRUCT VISIBILITY FOR MOTORISTS, CYCLISTS OR PEDESTRIANS. STREET TREES OPTIONAL.
4. DIRECTIONAL KERB RAMPS AS PER BSD-5231, WITH CONCRETE FOOTPATH AS PER BSD-5201 TO JOIN EXISTING. KERB RAMPS TO ALIGN WITH ISLAND PEDESTRIAN SLOT.
5. BUILDOUTS TO MAJOR ROAD DEPENDENT ON AVAILBLE WIDTH TO LANE LINE OR BICYCLE LANE.
6. STORMWATER DRAINAGE REQUIRED TO NEW LOW POINTS AT BUILDOUTS.
7. ISLAND NOSE SET BACK FROM FACE OF KERB 600mm OR AS REQUIRED FOR VEHICLE TURNING PATHS.
8. FOR DESIGN NOTES, CONSTRUCTION NOTES AND LEGEND REFER TO BSD-3201.

ISSUE	AMENDMENT	DRAWN DATE	CHK'D DATE	APPR'D DATE
C	Traffic Island/Median Surface Infill Pattern, Note 3 MUTCD Reference Updated	NOV '18	APR '19	Apr RPEQ 16110 '19
B	Drawing Title Amended	JAN '16	JUL '16	JUL '16
A	Drawing Converted from UMS Series April 2014	APR '14	APR '14	APR '14

DRAWING AUTHORISED FOR PUBLICATION
P COTTON SIGNATURE ON ORIGINAL
DATED 06/09/06

MANAGER CITY ASSETS, R.P.E.Q: 2 5 4

DESIGN APPROVED

V NASH SIGNATURE ON ORIGINAL

SENIOR PROGRAM OFFICER
ROAD NETWORK

DESIGN	STANDARDS WORKING GROUP	DATE	May '06
DRAWN	CITY DESIGN	DATE	May '06
CHECKED	D Maher	DATE	June '06
DRAWING FILENAME	BSD-3221 (C) Local traffic area - Perimeter gateway - General design criteria.dwg		
ASSOCIATED PLANS	SUPERSEDES UMS-971		

BRISBANE CITY

BRISBANE CITY COUNCIL STANDARD DRAWING

LOCAL TRAFFIC AREA
PERIMETER GATEWAY
GENERAL DESIGN CRITERIA

SCALE: NOT TO SCALE
DWG No.: BSD-3221
ORIGINAL SIZE: A3
REVISION: C