REFER TO BSD–7092 FOR ASSOCIATED SPECIFICATION NOTES.

INTERIM RELEASE

APPROVED FOR DISTRIBUTION APRIL 2014

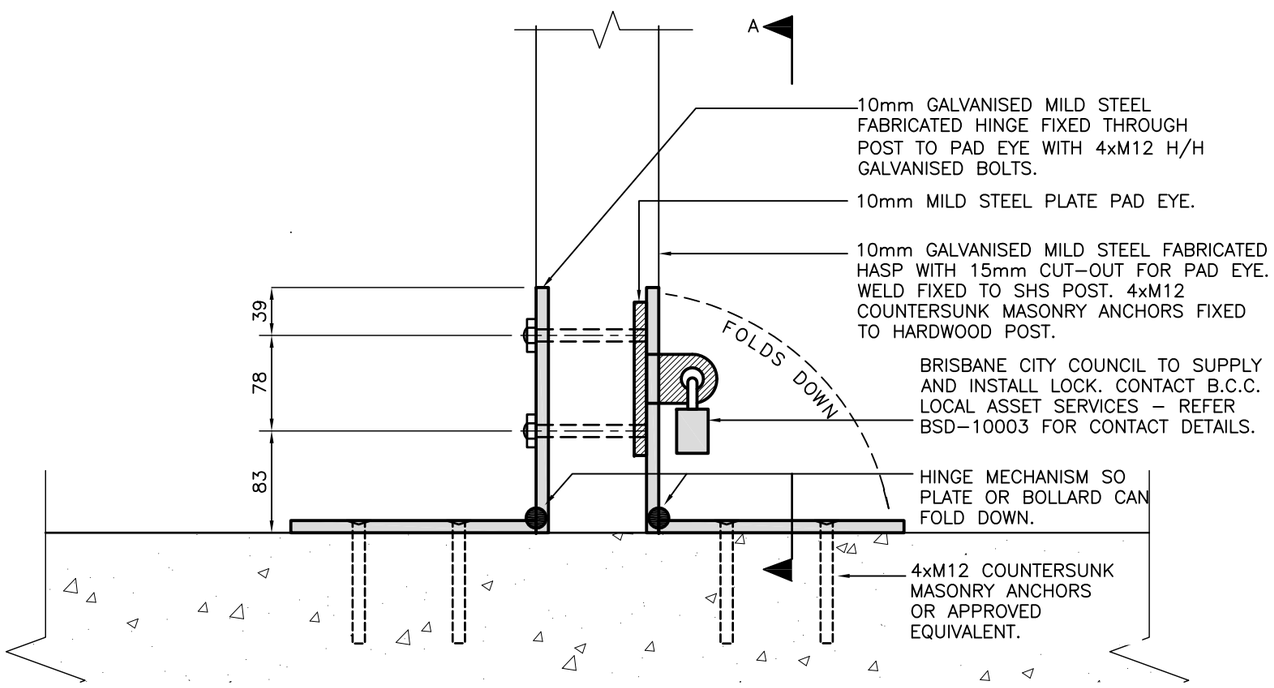

REMOVABLE BOLLARD – HINGE DETAIL
SCALE: 1:5

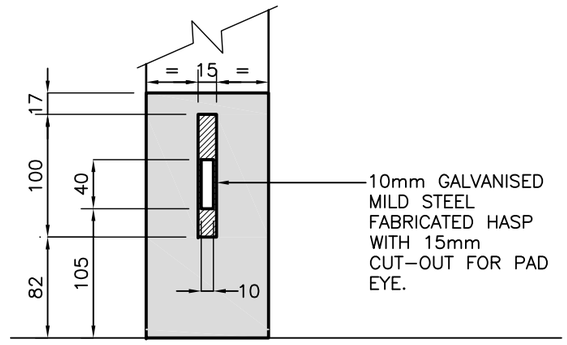

REMOVABLE BOLLARD – SECTION A–A – PAD EYE DETAIL
SCALE: 1:5

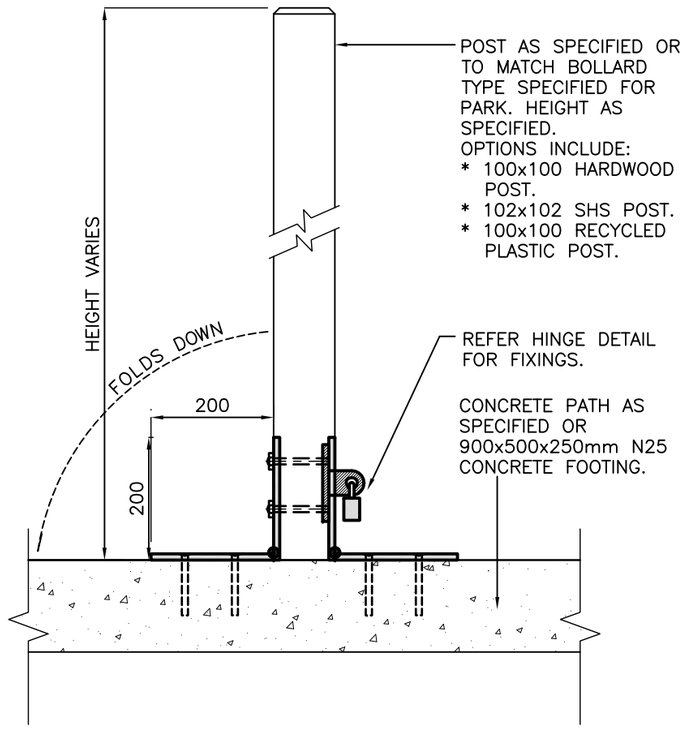

REMOVABLE BOLLARD – SECTION
SCALE: 1:10

ISSUE	AMENDMENT	DRAWN DATE	CHK'D DATE	APPR'D DATE
A	Drawing Converted From UMS Series April 2014	APR '14	APR '14	APR '14

DRAWING AUTHORISED FOR PUBLICATION
PAUL COTTON SIGNATURE ON ORIGINAL DATED 03/09/04
MANAGER INFRASTRUCTURE MANAGEMENT
R.P.E.Q: 2546

DESIGN APPROVED
LAUREN TEMPLEMAN SIGNATURE ON ORIGINAL DATED 31/08/04
PRICIPAL PROGRAM OFFICER PARKS

DESIGN	Std Dwgs WG	DATE	OCT '13
DRAWN	CPO - P&D	DATE	OCT '13
CHECKED	UMD - E&P & IMB	DATE	OCT '13
DRAWING FILENAME	BSD-7094.dwg		
ASSOCIATED PLANS	SUPERSEDES UMS-724		

BRISBANE CITY

BRISBANE CITY COUNCIL STANDARD DRAWING

BOLLARD – PARKS AND NATURAL AREAS – REMOVABLE

SCALE: AS SHOWN
DWG No. **BSD–7094**
ORIGINAL SIZE: A3
REVISION: A