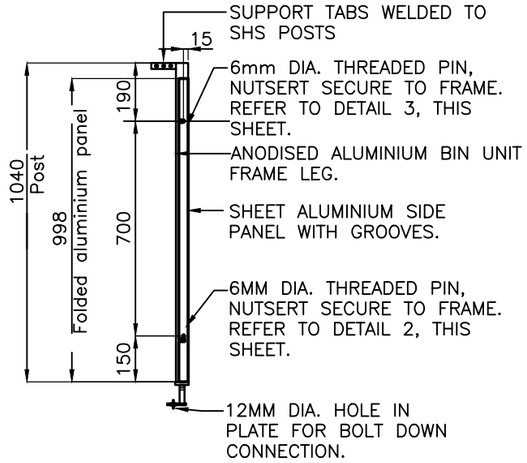

DETAIL 1 – LEG TO PANEL CONNECTION

SCALE 1:20

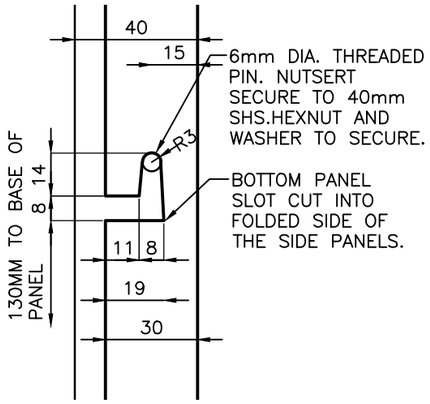

DETAIL 2 – BOTTOM PANEL GROOVE

SCALE 1:2

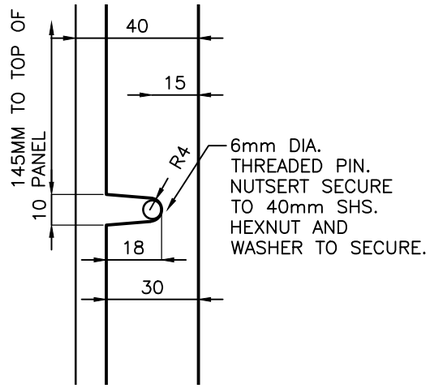

DETAIL 3 – TOP PANEL GROOVE

SCALE 1:2

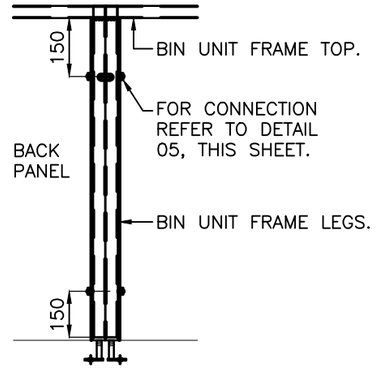

NOTE: PLACE BINS SIDE BY SIDE. FASTEN G–CLAMP AND TIGHTEN SO LEGS OF BOTH BINS ARE ABUTTING. POSITION CONNECTOR PLATE OVER THREADED PINS. SECURE WITH BOLT AND WASHERS WHEN IN POSITION.

DETAIL 4 – BIN UNIT TO BIN UNIT

SCALE 1:20

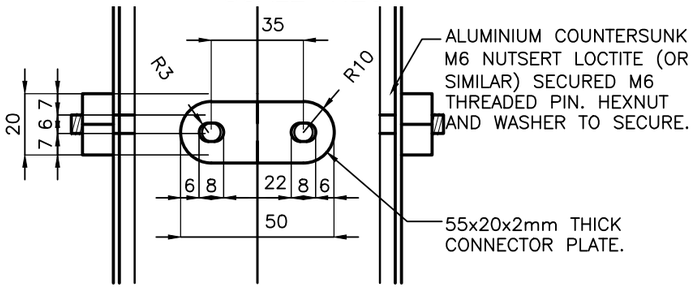

NOTE: POSITION CONNECTOR PLATE OVER THREADED PINS. SECURE WITH BOLT AND WASHERS WHEN IN POSITION.

DETAIL 5 – CONNECTOR PLATE

SCALE 1:2

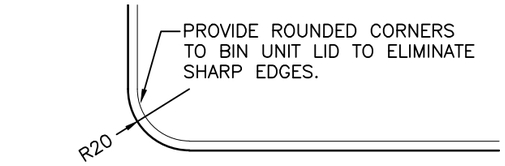

DETAIL 6 – BIN UNIT LID ROUNDED CORNER

SCALE 1:2

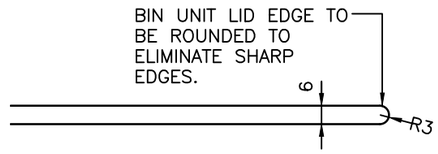

DETAIL 7 – BIN UNIT LID ROUNDED EDGE

SCALE 1:2

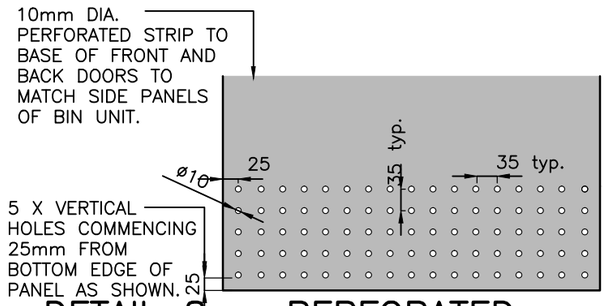

DETAIL 8 – PERFORATED STRIP

SCALE 1:10

FINISHES & COLOUR SCHEDULE	
ELEMENT	COLOUR/FINISH
FRONT AND SIDE PANELS	APPLIED TREATMENT DULUX 'METROPOLIS STORM PEARL' OR APPROVED EQUIVALENT
LID, FRAME, APRON	APPLIED CHEMICAL TREATMENT 'IRIDIUM' OR APPROVED EQUIVALENT
ALL OTHER COMPONENTS	ALUMINIUM UNLESS OTHERWISE NOTED

DISCLAIMER:
MAUFACTURED UNDER AUSTRALIAN PATENT NO. 2011100749 WITH PERMISSION OF THE INVENTOR.

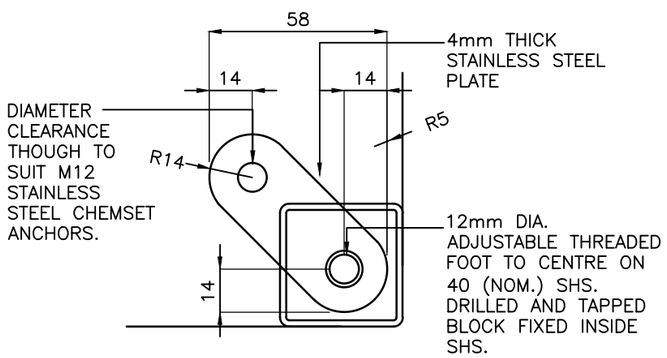

DETAIL 9 – PLAN DETAIL

SCALE 1:2

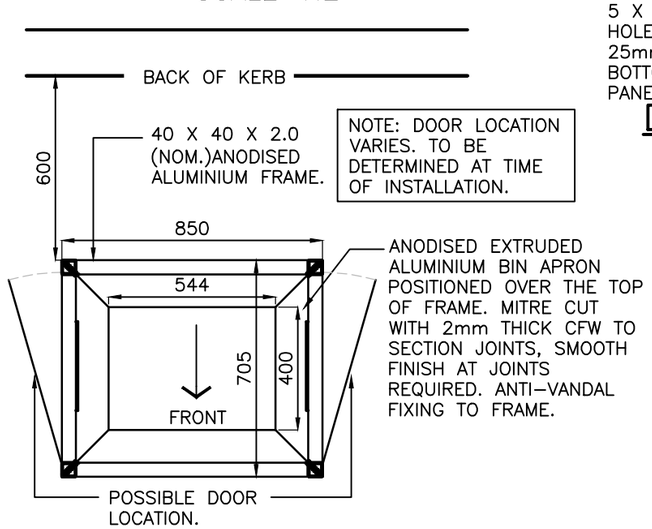

DETAIL 10 – BIN APRON (TOP)

SCALE 1:20

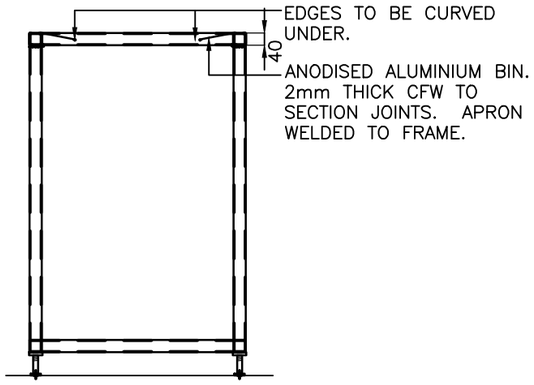

DETAIL 11 – BIN APRON (SIDE)

SCALE 1:20

ISSUE	AMENDMENT	DRAWN DATE	CHK'D DATE	APPR'D DATE
D	Colour Finish Requirements Updated	MAY '17	MAY '17	MAY '17
C	Drawing Title Amended	FEB '16	JUL '16	JUL '16
B	Amendment to Bin Details	MAY '14	MAY '14	MAY '14
A	Drawing Converted From UMS Series May 2014	MAY '14	MAY '14	MAY '14

DRAWING AUTHORISED FOR PUBLICATION
Inga Condric 2014.07.15 10:31:14+10'00'
ASSET ENGINEERING MANAGER STRATEGIC ASSET MANAGEMENT
Bernard Quinn
LITTER PROGRAM OFFICER

DESIGN	Std Dwgs WG	DATE	MAY '14
DRAWN	CPO - P&D	DATE	MAY '14
CHECKED	BI - FSG - WS	DATE	MAY '14
DRAWING FILENAME	BSD-7302 (C) Anodised - 240L-Alternate Aspect - Bin Unit Design - Sheet 2 of 2.dwg		
ASSOCIATED PLANS			

BRISBANE CITY

BRISBANE CITY COUNCIL STANDARD DRAWING

ANODISED 240L ALTERNATIVE ASPECT – BIN UNIT DESIGN SHEET 2 OF 2

SCALE: AS SHOWN
DWG No. BSD–7302
ORIGINAL SIZE: A3
REVISION: D