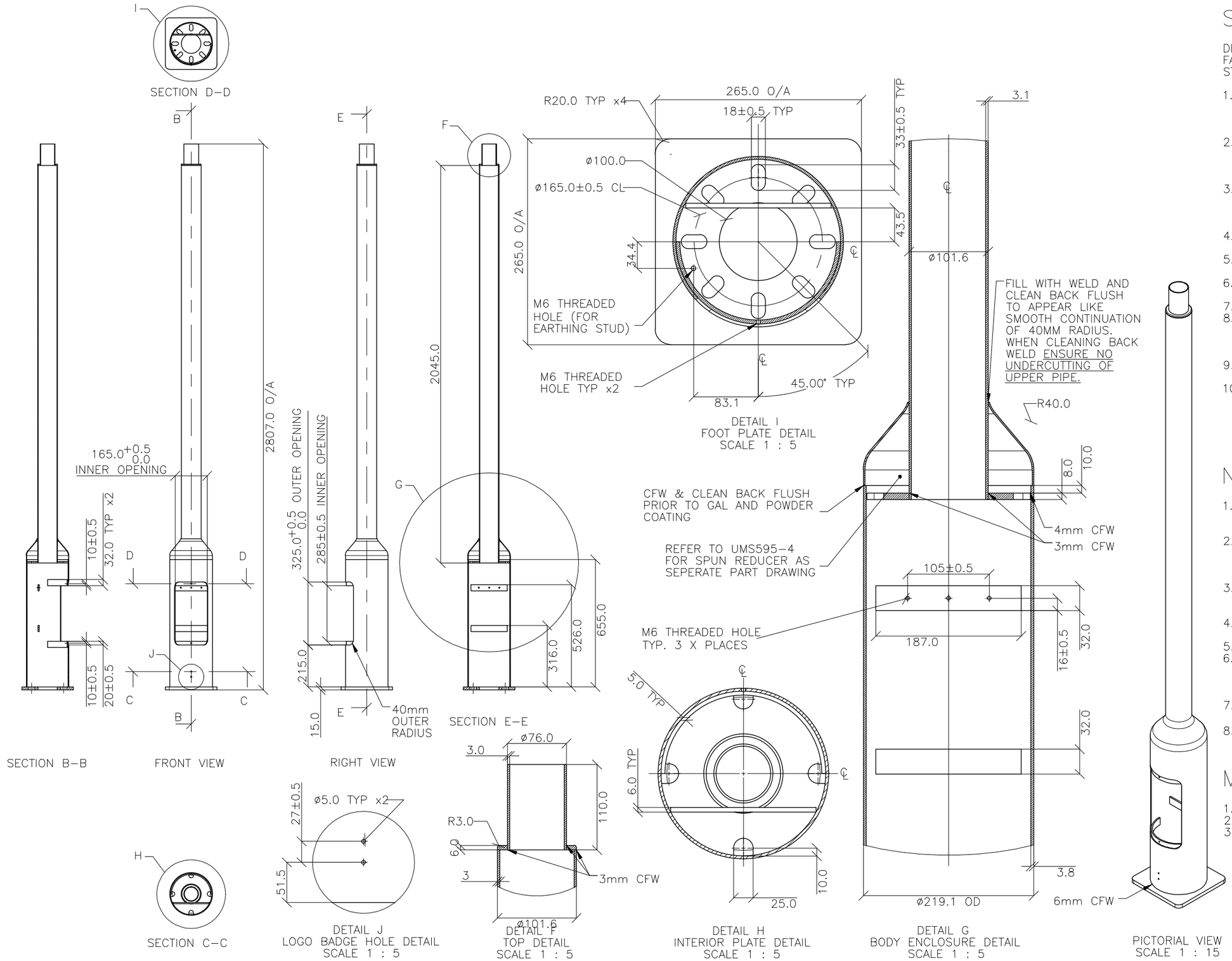

STANDARDS

DESIGNED IN ACCORDANCE WITH, AND FABRICATION TO MEET THE FOLLOWING STANDARDS:

1. AS1428.4.1:2009, TACTILE GROUND SURFACE INDICATORS FOR THE ORIENTATION OF PEOPLE WITH VISION IMPAIRMENT.
2. AS1627.4 METAL FINISHING – PREPARATION AND PRE–TREATMENT OF SURFACES – ABRASIVE BLAST CLEANING OF STEEL.
3. AS2312:2002/AMDT 1:2004, GUIDE TO PROTECTION OF IRON AND STEEL AGAINST EXTERIOR ATMOSPHERIC CORROSION, 1994.
4. GUIDE TO ENGINEERING PRACTICE, 'PEDESTRIANS', PART 13, AUSTROADS.
5. AUSTRALIAN ROAD RULES , 1999, WWW.NRTC.GOV.AU
6. AS4506 –2005, METAL FINISHING– THERMOSET POWDER COATINGS.
7. AS4680:2006, HOT DIP GALVANISING.
8. AS1158.3.1:2005; ROAD LIGHTING, PART 3.1: PEDESTRIAN AREA (CATEGORY P) LIGHTING – PREFORMANCE AND INSTALLATION DESIGN REQUIREMENTS.
9. MANUAL OF UNIFORM TRAFFIC CONTROL DEVICES (MUTCD)
10. AS1158.3.1:2005; LIGHTING FOR ROADS AND PUBLIC SPACES – PEDESTRIAN AREA (CATEGORY LIGHTING – PREFORMANCE AND DESIGN REQUIREMENTS – AND ANY RELEVANT AMENDMENTS OR SUBCATEGORIES)

NOTES

1. WELDING TO BE ACCORDANCE TO AS1554.1 CAT GP WELDING, ALL SHARP EDGES & BURRS REMOVED.
2. POWDER COATING TO BE ACCORDANCE TO AS4506–2005 EXTERNAL EXPOSURE STANDARD WITH PRE–TREATMENT SAND BLAST, ZINC PHOSPHATE, ETC.
3. PART SHOULD BE SUPPLIED CLEAN AND FREE FROM MARKS, BURRS, SCUFFS, DISTORTION AND WARPAGE.
4. ENSURE ANTI–SEIZE IS ON ALL NUTS AND BOLTS PRIOR TO ASSEMBLY.
5. DRAWING TO AS1100 DRAWING STANDARDS.
6. 316 S.S AND 316 S.S FASTENERS TO BE USED THROUGHOUT FOR COASTAL INSTALLATIONS OR ANY ENVIRONMENT WITH HIGH CORROSION.
7. ALL TOLERANCES ± 1.5mm UNLESS OTHERWISE SPECIFIED.
8. FOOTINGS FOR LIGHT POLE TO BE DESIGNED AND CERTIFIED BY AN RPEQ.

MATERIAL

1. MATERIAL: MILD STEEL
2. COLOUR: METROPOLIS STORM PEARL
3. FINISH: GLAVANISED AND POWDER COATED

STRUCTURAL DESIGN REVIEWED AND CERTIFIED FOR ISSUE

NAME: B.C. PLANT RPEQ: 8807

SIGNATURE: ON ORIGINAL DATE: 28/ 6 /12

ISSUE	AMENDMENT	DRAWN DATE	CHK'D DATE	APPR'D DATE
B	Drawing Title Amended	FEB '16	JUL '16	JUL '16
A	Drawing Converted From UMS Series April 2014	APR '14	APR '14	APR '14

DRAWING AUTHORISED FOR PUBLICATION

Inga Condric 2014.04.15 12:48:29+10'00'

for ASSET ENGINEERING MANAGER STRATEGIC ASSET MANAGEMENT

DESIGN APPROVED

VICKI MARTIN SIGNATURE ON ORIGINAL

PRINCIPAL PLANNING OFFICER URBAN DESIGN

DESIGN	FORMZOO DESIGN	DATE	June '12
DRAWN	AB	DATE	June '12
CHECKED	VM	DATE	04/13
DRAWING FILENAME	BSD-11004 (B) Light pole - Body - Sheet 2 of 6.dwg		
ASSOCIATED PLANS	SUPERSEDES UMS 595 Series		

BRISBANE CITY

BRISBANE CITY COUNCIL STANDARD DRAWING

LIGHT POLE BODY SHEET 2 OF 6

SCALE 1:20

DWG No. BSD 11004

ORIGINAL SIZE A3

REVISION B